PRODUCED BY AN AUTODESK EDUCATIONAL PRODUCT

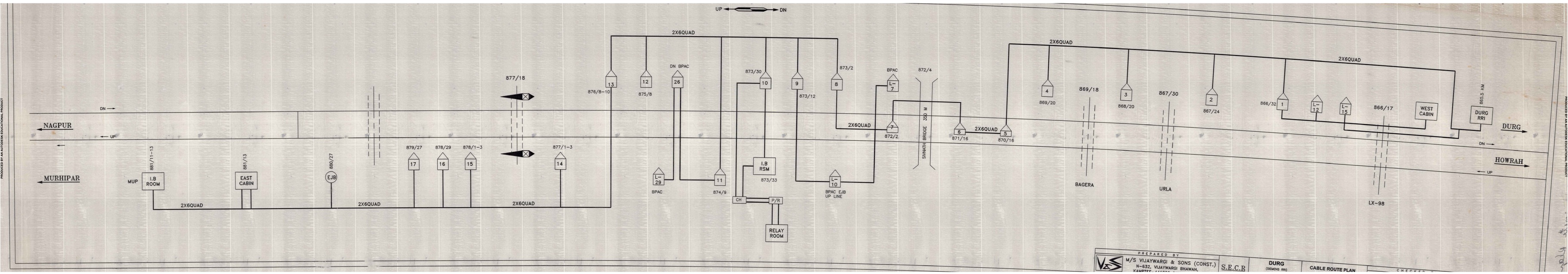

PREPARED BY
M/S VIJAYWARGI & SONS (CONST.)
N-632, VIJAYWARGI BHAWAN,

S.E.C.R

DURG
(DESIGN RR)

CABLE ROUTE PLAN

CHECKED

PRODUCED BY AN AUTODESK EDUCATIONAL PRODUCT